B1950R

[illegible]

[illegible] SIDED [illegible] CYMI

DIAEDGE

MITSUBISHI MATERIALS

[illegible]

[illegible]

AHX440S

P
M
K
H

IDÉAL [illegible]

- Diametros disponibles de 40 a 160 mm (3 a 16 dientes)
- [illegible]
- Placas reforzadas para un corte [illegible]
- [illegible] cortes
- Máximo [illegible] APMX: 3 mm
- [illegible] APMX: 3 mm
- Soporte [illegible] (0 mm / 0,125 mm)
- [illegible] (0 mm / 0,125 mm)
- Resistente [illegible] mm
- [illegible] mm / 0,2 mm

AHX475S

P
K
H

FRESATURA AD ALTO AVANZAMENTO EFFICIENTE E AFFIDABILITÀ [illegible] DI PROCESSO

- [illegible] (4 – 12 dientes)
- Disponibilità diametri da Ø 50 a 160 mm (4 – 12 denti)
- [illegible] cortes
- Inserto bilaterale a 14 taglienti
- [illegible] APMX: 1.6 mm
- Profondità di taglio max. APMX: 1.3 mm
- [illegible] (Ø 50 – 160 mm)
- Fori per il passaggio del refrigerante (Ø 50 – 160 mm)
- [illegible] bar
- Velocità di avanzamento fino a 2 mm / dente

AHX640S

P
M
K
H

[illegible] IDEAL PARA [illegible]

- Rango de diámetros 63 – 200 mm (4 – 12 dientes)
- [illegible] (4 – 12 dientes)
- Doble cara, insertos [illegible] cortes
- [illegible] cortes
- Máxima profundidad de corte APMX: [illegible] mm
- [illegible] APMX: 6 mm
- Orificios para [illegible] (0 mm / 0,125 mm)
- [illegible] (0 mm / 0,125 mm)

AHX640W

K

ZALECANE DO OBRÓBKI ZGRUBNEJ OGÓLNEJ ŻELIWA NA OBRABIARKACH [illegible] O ŚREDNIEJ I DUŻEJ MOCY

[illegible] İÇİN İDEALDİR

- Zakres średnic: Ø 80 – 315 mm (8 – 44 płytek)
- [illegible] (4 – 12 dientes)
- Płytki dwustronne, 14 krawędzi skrawających
- [illegible] cortes
- Maksymalna głębokość skrawania APMX: 6 mm
- [illegible] mm
- System mocowania na klin zapobiegający przemieszczaniu się płytek (Anti-Play), o wysokiej sztywności [illegible] rigidità

[illegible]

[illegible] WYCH I ŻELIW

[illegible]

[illegible] WSP [illegible] zwiększonej [illegible] efficiente Fräsen.

[illegible] JĄCEJ

[illegible] Bearbeitung.

[illegible]

[illegible] de la herramienta.

[illegible] WERKSTOFFEN

P	PVD	M	PVD	K	PVD	CVD	S	PVD	H	PVD
P10	VP15TF, VP20RT, MP6120, MP6130	M10	VP15TF, VP20RT, MP7030, MP7130, MP7140	K10	VP15TF, VP20RT	XC5010, MC5020	S10	VP20RT, MP9120, MP9130	H10	VP15TF
P20		M20		K20			S20		H20	
P30		M30		K30			S30		H30	
P40		M40		K40			S40		H40	

MP6120
[illegible] Stahl

MP6130
[illegible] Stahl

MP7030
[illegible] Stahl

MP7130
[illegible] Stahl

MP7140
[illegible] Bedindungen

MC5020
[illegible] çelenmesi için

MP9120
[illegible] çelenmesi için

MP9130
[illegible] yetanu

XC5010
[illegible] Schnittgeschwindigkeiten

AHX440S / AHX475S / AHX640S

[illegible] FRESADO

AHX440S

[illegible] function [illegible] produce [illegible] contact [illegible]

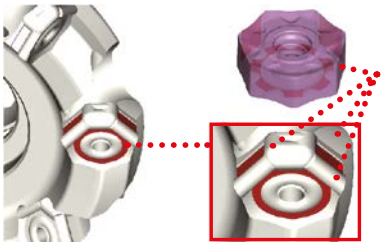

Superficie de contacto

[illegible]

AHX475S

[illegible] 75° [illegible] mm.

AHX475S

AHX640S

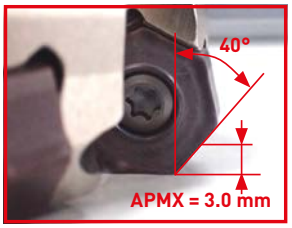

AHX440S
([illegible])

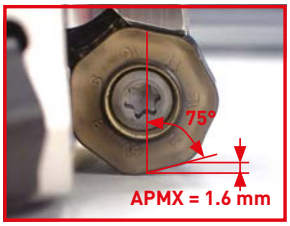

AHX475S

[illegible]

XC5010

[redacted]

[redacted]

[redacted]

[redacted]

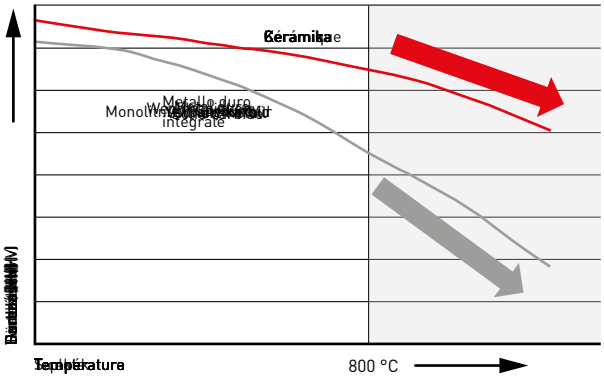

[redacted]

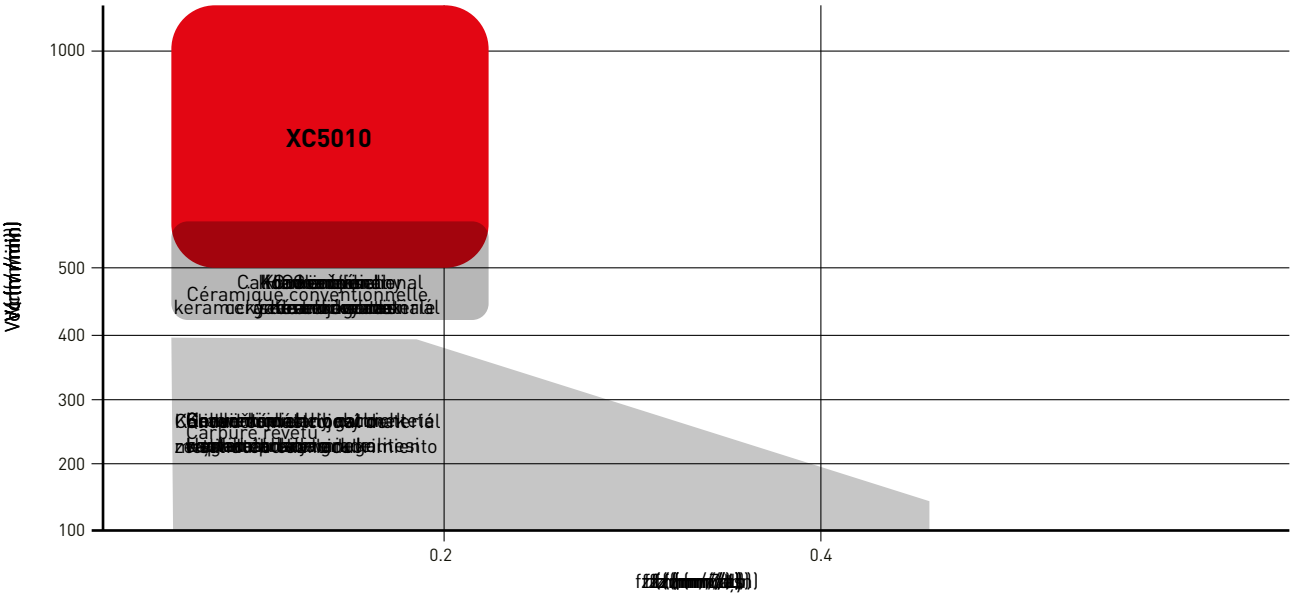

XC5010

[redacted]

[redacted]

[redacted]

[redacted] LA [redacted] BEARBEITUNG

[redacted] materials verhindert.

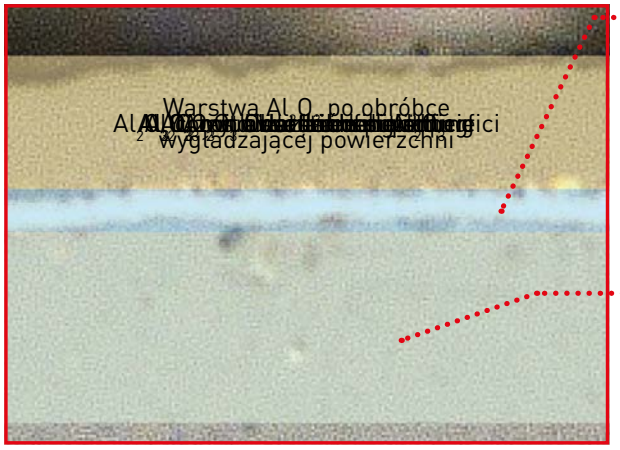

TECNOLOGIA

[redacted] si, [redacted] ici [redacted] ung [redacted] bdérione tra il materiale a base ceramica e lo strato di rivestimento.

[redacted] wa [redacted] ni [redacted] a [redacted] ermöglicht.

Materiale [redacted] de la pièce	[redacted]
[redacted] ta	AHX640S
DC (mm)	80
Vc (m/min)	1000
fz (mm/[redacted])	0.1
ap (mm)	2.0
ae (mm)	50
[redacted] io	[redacted] ung

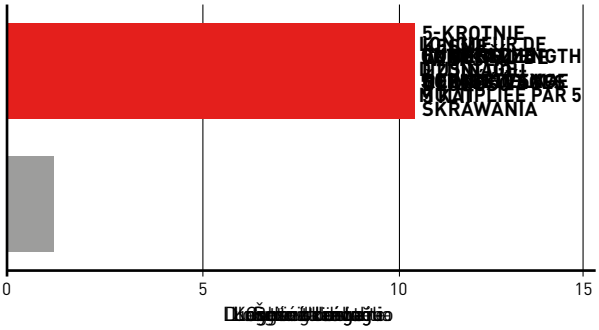

[redacted]

XC5010

[redacted] no [redacted] materiál

Video [redacted] ung [redacted]

XC5010

[illegible]AGE

[illegible] M / MIN

[illegible] vysokorychlostním hrubování.

Matériau de la pièce	[illegible]
[illegible]nta	AHX640S
DC (mm)	80
Vc (m/min)	1000
fz (mm/[illegible])	0.1
ap (mm)	2.0
ae (mm)	40
[illegible]io	[illegible]

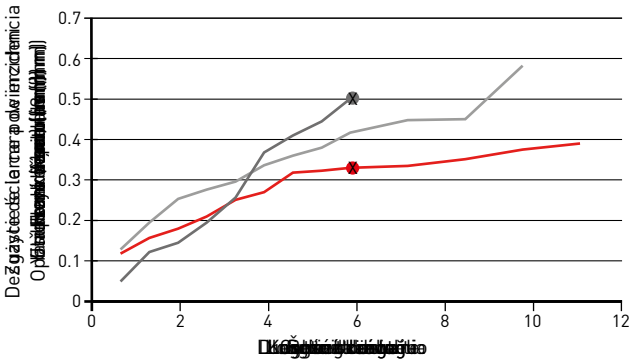

WYGL[illegible]CI 6 M

XC5010

Prod[illegible]lny A

[illegible] M/MIN

[illegible] 20 m.

Matériau de la pièce	[illegible]
[illegible]nta	AHX640S
DC (mm)	125
Vc (m/min)	1000
fz (mm/[illegible])	0.1
ap (mm)	2.0
ae (mm)	100
[illegible]io	[illegible]

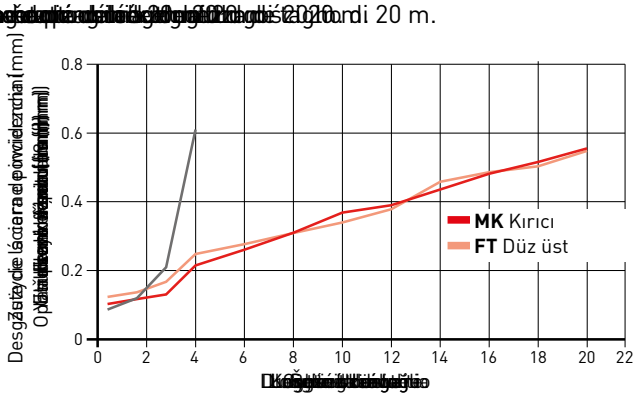

[illegible]

XC5010

[illegible]

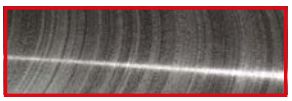

XC5010

[illegible]

XC5010

Sa[illegible]FT)

XC5010

Sa[illegible]FT)

[illegible] 4 m zu Ausbrüchen.
[illegible] de 4 m.

: XC5010 A B: [illegible]

XC5010

[redacted]AS

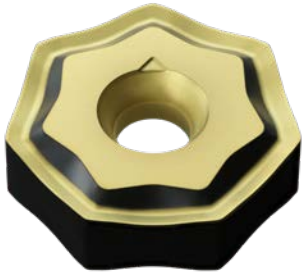

[redacted]ENTEN

[redacted] the [redacted]owej.

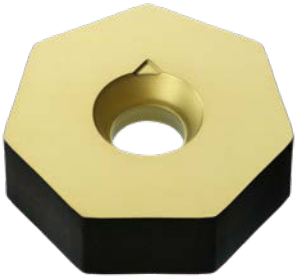

[redacted]ĄCA

[redacted] de [redacted]ndern.

[redacted]Wendeschneidplatten.

[redacted]: ŻELIWO DIN GGG 60

[redacted]e.

Matériau de la pièce	[redacted]
[redacted]nta	AHX640S
DC (mm)	63
fz (mm/[redacted])	0.1
ap (mm)	1.0
ae (mm)	32
[redacted]io	[redacted]ung

Vc = 1000 m/min

XC5010

[redacted]

Vc = 250 m/min

Konk[redacted]jový [redacted]

[illegible] STALI

[illegible] (S)

DC	Type	ZEFF	AHX440S			AHX475S			AHX640S		
			[illegible]			[illegible]			[illegible]		
			[illegible]	fr	APMX	[illegible]	fr	APMX	[illegible]	fr	APMX
40	[illegible]	3	●	0.6 – 1.2	3						
	[illegible]	4	●	0.8 – 1.6	3						
50	[illegible]	4	●	0.8 – 1.6	3	●	2.4 – 4.0	1.6			
	[illegible]	5	●	1.0 – 2.0	3	●	3.0 – 5.0	1.6			
	[illegible]	6	●	1.2 – 2.4	3						
63	[illegible]	4							●	0.8 – 1.6	6
	[illegible]	5	●	1.0 – 2.0	3	●	3.0 – 5.0	1.6	●	1.0 – 2.0	6
	[illegible]	6	●	1.2 – 2.4	3	●	3.6 – 6.0	1.6			
	[illegible]	8	●	1.6 – 3.2	3						
80	[illegible]	4							●	0.8 – 1.6	6
	[illegible]	6	●	1.2 – 2.4	3	●	3.6 – 6.0	1.6	●	1.2 – 2.4	6
	[illegible]	8	●	1.6 – 3.2	3	●	4.8 – 8.0	1.6			
	[illegible]	10	●	2.0 – 4.0	3						
100	[illegible]	5							●	1.0 – 2.0	6
	[illegible]	7	●	1.4 – 2.8	3	●	4.2 – 7.0	1.6	●	1.4 – 2.8	6
	[illegible]	9				●	5.4 – 9.0	1.6			
	[illegible]	10	●	2.0 – 4.0	3						
	[illegible]	12	●	2.4 – 4.8	3						
125	[illegible]	6							●	1.2 – 2.4	6
	[illegible]	8	●	1.6 – 3.2	3	●	4.8 – 8.0	1.6	●	1.6 – 3.2	6
	[illegible]	10				●	6.0 – 10.0	1.6			
	[illegible]	12	●	2.4 – 4.8	3						
	[illegible]	14	●	2.8 – 5.6	3						
160	[illegible]	7							●	1.4 – 2.8	6
	[illegible]	10	●	2.0 – 4.0	3	●	6.0 – 10.0	1.6	●	2.0 – 4.0	6
	[illegible]	12				●	7.2 – 12.0	1.6			
	[illegible]	14	●	2.8 – 5.6	3						
	[illegible]	16	●	3.2 – 6.4	3						
200	[illegible]	8							●	1.6 – 3.2	6
	[illegible]	12							●	2.4 – 4.8	6

1. fr: [illegible] (See page 12 for details.)
2. [illegible]
3. APMX: [illegible] (Consulta).
3. [illegible] legato.

[illegible] STALI

[illegible] ŁĄCZĄCYCH I [illegible]NGEN)

[illegible]

[illegible] w głowicach [illegible] w głowicy AHX640W [illegible] WK et FT).

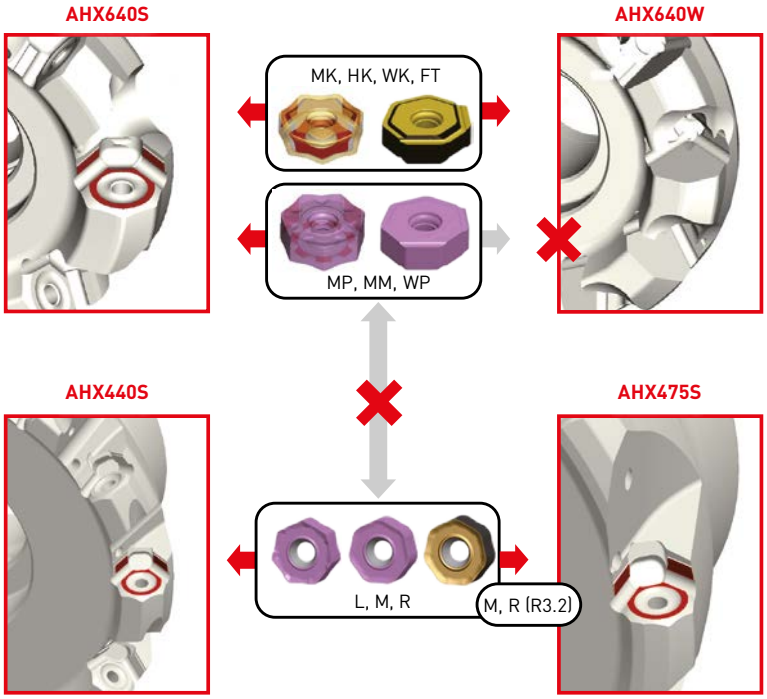

[illegible] STALI

[illegible]

[illegible]

- [illegible]
- [illegible] Widerstand
- [illegible] de corte

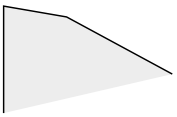

[illegible]

- [illegible]
- [illegible]

[illegible]

- [illegible]
- [illegible]
- [illegible] rinforzato

[illegible] :

● [illegible] Bearbeitung

AHX440S

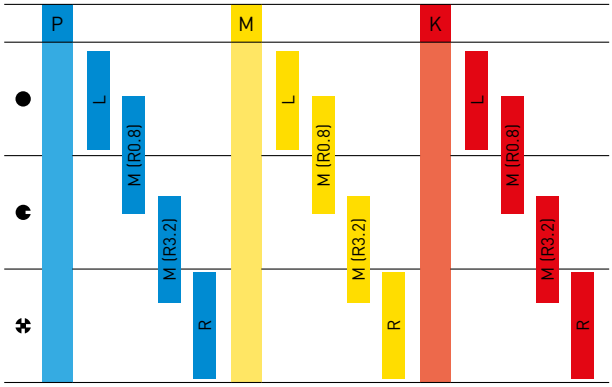

AHX640S

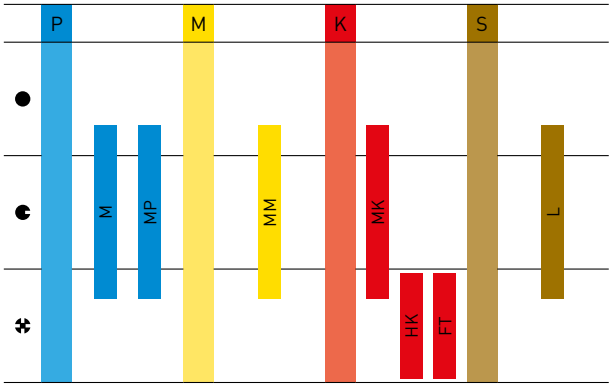

[illegible] AHX440S / AHX640S

[illegible] verbessern.

P **WP** [illegible] z łamaczem **MP** [illegible] prawotnącej [illegible]

K **WK** [illegible] z łamaczem **MK** [illegible] prawotnącej [illegible]

AHX640W

[illegible]EY

[illegible]ELA GHISA

[illegible] ELEVATO

Ar[illegible]pe

[illegible]

[illegible] le [illegible] (VSP). [illegible] (AFI) dient.

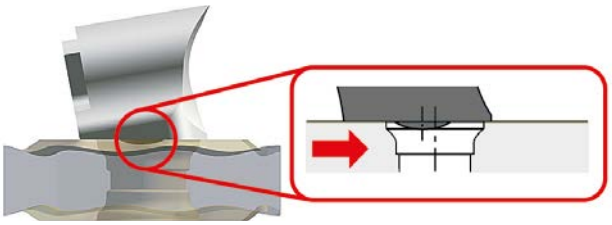

Verhinde[illegible]

2 [illegible]ONS

[illegible] WSP können die Werkzeuge [illegible] verwendet werden.

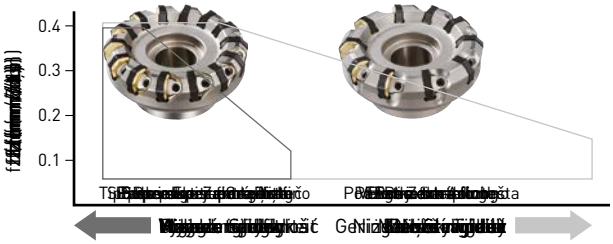

AHX640W

[redacted]EY

[redacted]ELA GHISA

[redacted]S

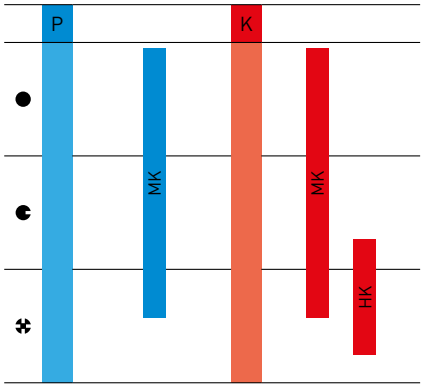

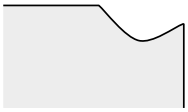

[redacted] przemysłowe

- [redacted] sion (classe M)
- [redacted] wędzi skrawających.
- [redacted] ute.
  [redacted] ującego.

[redacted] ca płytki

- [redacted] sion (classe M)
- [redacted] wędzi skrawających.
- [redacted] se
  [redacted] d
  [redacted] wem.

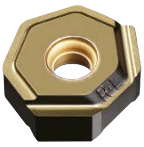

[redacted] dzająca

- [redacted] do
- [redacted] niczek
- [redacted] li
  [redacted] od liczby zastosowanych płytek wygładzających.

1. [redacted] AHX649S.
2. [redacted] XC5010 [redacted] Cartouche XC5010.

NEW

[redacted]

[redacted]

[redacted]

[redacted] na utlenianie i na ścieranie.

[redacted]

[redacted] sont généralement sujettes à la fissuration thermique.

[redacted]

[redacted]

[redacted]

[redacted]

[redacted]

[redacted]

MV1020

[redacted] reduziert die Bearbeitungszeit erheblich.

MV1030

[redacted] realisiert.

P	CVD		PVD			M	CVD		PVD			K	CVD				PVD		S	PVD			H	PVD
P10	MV1020		MP6120		VP15TF	M10					VP15TF	K10	MC5020	MV1020		XC5010			S10	MP9120		VP15TF	H10	
P20		MV1030		MP6130		M20	MV1030		MP7130	MP7030		K20			MV1030		VP15TF		S20		MP9130		H20	VP15TF
P30						M30			MP7140			K30						VP20RT	S30				H30	
P40						M40						K40							S40				H40	

1. [redacted] jest obróbka na mokro.

NEW

MV1020 / MV1030

[illegible]

[illegible]ERATURY

[illegible] (Al,Ti)N [illegible] (Al-Rich) [illegible] Anteil [illegible] (Al,Ti)N [illegible] Substrate [illegible] Substrate

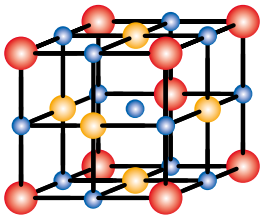

[illegible]PE

[illegible]GUSSEISEN

Matériau de la pièce	[illegible] (0.7070)
[illegible]nta	AHX440
[illegible]	NNMU130508ZEN-M
Vc (m/min)	300
fz (mm/[illegible])	0.1
ap (mm)	2.0
ae (mm)	52
[illegible]lio	[illegible]ung [illegible]

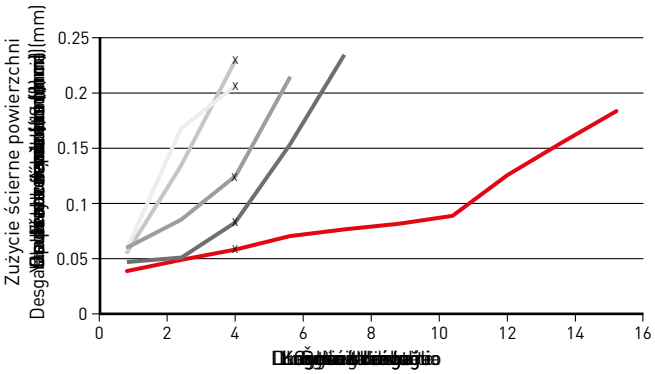

[illegible]

MV1020

Prod[illegible]lny A

Prod[illegible]lny B

Prod[illegible]lny C

Prod[illegible]lny D

: MV1020 A B C D : [illegible]

MP6100 / MP7100 / MP9100

[illegible]

[illegible]-Cr-N

[illegible]ance
[illegible]
[illegible]vi
tarcia.

[illegible]gama
[illegible]stung

[illegible]at
[illegible]karbidu.

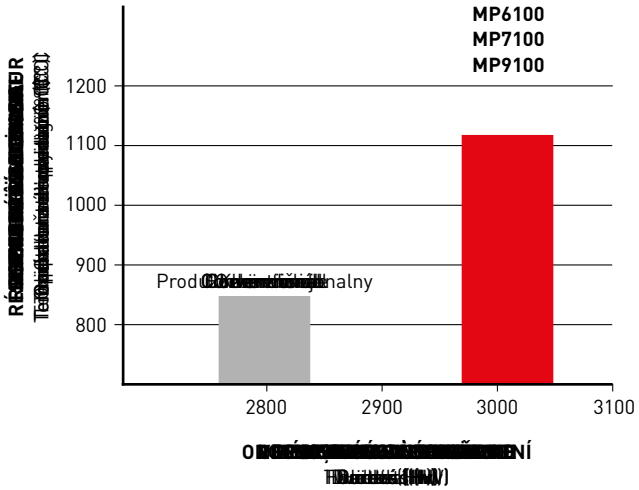

[illegible]ENT

	Materiál	Nástroj [illegible]ateriál	W[illegible]C)		
			C55	X10CrNi18-9	Ti6Al4V
P	[illegible]o	MP61○○	0.4		
M	[illegible]	MP71○○		0.5	
S	[illegible]ente	MP91○○		0.7	0.3
	[illegible]ny		0.7		0.7

TOUGH-Σ

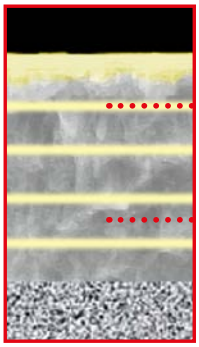

[illegible]

[illegible]
[illegible] geeignete Beschichtung

[illegible]-
[illegible]destiur
[illegible]te-
[illegible]he
[illegible]re
[illegible]widerstand.

P	**[illegible]N** [illegible]aique	
M	**TiN** [illegible]ąsbów	
S	**CrN** [illegible]ras	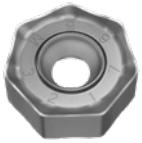

P	PVD	M	PVD	K	CVD	PVD	S	PVD	H	PVD
P10	MP6120 VP15TF	M10	VP15TF	K10	MC5020 XC5010		S10	MP9120 VP15TF	H10	
P20	MP6130	M20	MP7130 MP7030	K20		VP15TF	S20	MP9130	H20	VP15TF
P30		M30	MP7140	K30		VP20RT	S30		H30	
P40		M40		K40			S40		H40	

MC5020

[illegible] Kontakt auftreten.

Ya[illegible]m:
MC5020

[illegible]

[illegible]

[illegible]

[illegible] rotura repentina del filo de corte.

[illegible]

[illegible] portées.

[illegible] SMOOTH”

[illegible]

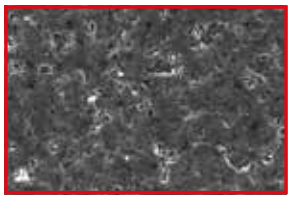

MC5020

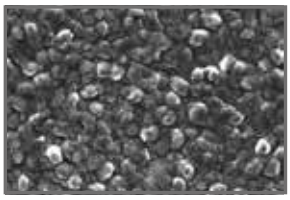

Produ[illegible]nalny

[illegible]PE

[illegible]

MC5020

[illegible]

Sta[illegible]ial superficiale

[illegible]PE

[illegible]ENÍ

Matériau de la pièce	[illegible]30
[illegible]nta	AHX640WR10010D
[illegible]	NNMU200608ZEN-MK
Vc (m/min)	300
fz (mm/[illegible])	0.3
ap (mm)	5.0
ae (mm)	100
[illegible]io	[illegible]ung [illegible]ka

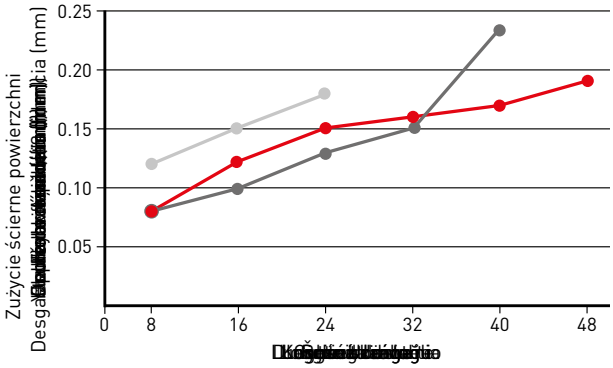

[illegible] diente.

[illegible]ECHNI

Matériau de la pièce	[illegible]7
[illegible]nta	AHX640WR10014D
[illegible]	NNMU200608ZEN-MK
[illegible]ęca	WNEU2006ZEN7C-WK
Vc (m/min)	350
fz (mm/[illegible])	0.1
ap (mm)	0.4
ae (mm)	80
[illegible]io	[illegible]rtme

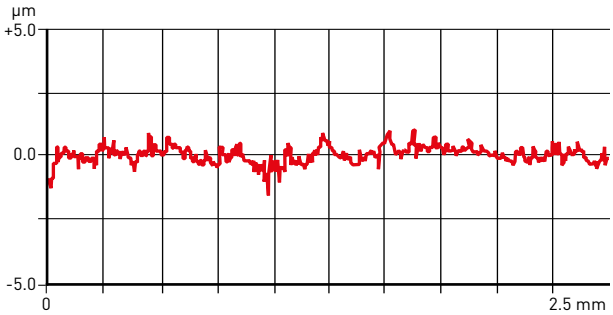

■ : MC5020 ■ A ■ B : [illegible]

AHX440S

50° KAPR

[illegible] NATURA

P M K H

KAPR: 50°
GAMP: -10°
GAMF: -7°

1

Ø 40
Ø 50
Ø 63
Ø 80

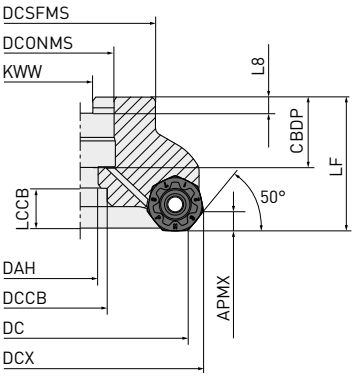

2

Ø 100
Ø 125
Ø 160

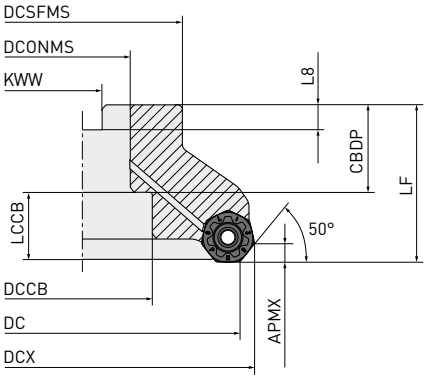

3

Ø 160

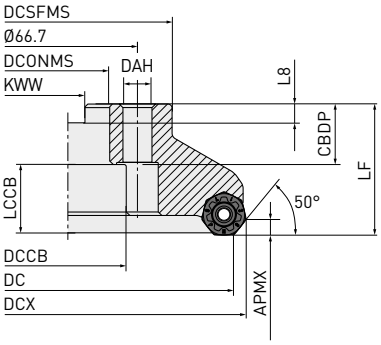

Solo [illegible]

Tipo de fresa para herramientas	[illegible]			
	[illegible]	[illegible]		[illegible]
AHX440S-040A○○AR	HSC08025H	HSC08040	1	1 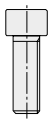
AHX440S-050A○○AR	HSC10030H	HSC10035		
AHX440S-063A○○AR	HSC10030H	HSC10035		
AHX440S-080A○○AR	HSC12035H	HSC12035		
		HSC12045		
AHX440S-100B○○AR	MBA16033H	—	2	2 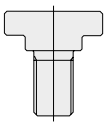
AHX440S-125B○○AR	MBA20040H	—		

AHX440S – [redacted]NATURA

[redacted]RMALÉSAGE

[redacted]wy	[redacted]	APMX	DC	DCONMS	LF	WT	ZEFF	[redacted]	[redacted]
AHX440S-040A03AR	●	3	40	16	40	0.3	3	○	1
AHX440S-040A04AR	●	3	40	16	40	0.2	4	○	1
AHX440S-050A04AR	●	3	50	22	40	0.4	4	○	1
AHX440S-050A05AR	●	3	50	22	40	0.4	5	○	1
AHX440S-050A06AR	●	3	50	22	40	0.4	6	○	1
AHX440S-063A05AR	●	3	63	22	40	0.6	5	○	1
AHX440S-063A06AR	●	3	63	22	40	0.6	6	○	1
AHX440S-063A08AR	●	3	63	22	40	0.5	8	○	1
AHX440S-080A06AR	●	3	80	27	50	1.1	6	○	1
AHX440S-080A08AR	●	3	80	27	50	1.1	8	○	1
AHX440S-080A10AR	●	3	80	27	50	1.1	10	○	1
AHX440S-100B07AR	●	3	100	32	50	1.6	7	○	2
AHX440S-100B10AR	●	3	100	32	50	1.6	10	○	2
AHX440S-100B12AR	●	3	100	32	50	1.6	12	○	2
AHX440S-125B08AR	●	3	125	40	63	3.0	8	○	2
AHX440S-125B12AR	●	3	125	40	63	3.0	12	○	2
AHX440S-125B14AR	●	3	125	40	63	2.9	14	○	2
AHX440S-160C10NR	●	3	160	40	63	4.8	10	—	3
AHX440S-160C14NR	●	3	160	40	63	4.6	14	—	3
AHX440S-160C16NR	●	3	160	40	63	4.7	16	—	3

1/1

1. [redacted]
2. ○ = [redacted]nia chłodziwa.

[redacted]

[redacted]wy	CBDP	DAH	DCCB	DCONMS	DCSFMS	DCX	KWW	L8	[redacted]
AHX440S-040A03AR	18	9	—	16	37	48.4	8.4	5.6	1
AHX440S-040A04AR	18	9	—	16	37	48.4	8.4	5.6	1
AHX440S-050A04AR	20	11	—	22	47	58.4	10.4	6.3	1
AHX440S-050A05AR	20	11	—	22	47	58.4	10.4	6.3	1
AHX440S-050A06AR	20	11	—	22	47	58.4	10.4	6.3	1
AHX440S-063A05AR	20	11	—	22	50	71.4	10.4	6.3	1
AHX440S-063A06AR	20	11	—	22	50	71.4	10.4	6.3	1
AHX440S-063A08AR	20	11	—	22	50	71.4	10.4	6.3	1
AHX440S-080A06AR	23	13	—	27	56	88.4	12.4	7	1
AHX440S-080A08AR	23	13	—	27	56	88.4	12.4	7	1
AHX440S-080A10AR	23	13	—	27	56	88.4	12.4	7	1
AHX440S-100B07AR	32	—	45	32	78	108.4	14.4	8	2
AHX440S-100B10AR	32	—	45	32	78	108.4	14.4	8	2
AHX440S-100B12AR	32	—	45	32	78	108.3	14.4	8	2
AHX440S-125B08AR	40	—	56	40	89	133.4	16.4	9	2
AHX440S-125B12AR	40	—	56	40	89	133.4	16.4	9	2
AHX440S-125B14AR	40	—	56	40	89	133.3	16.4	9	2
AHX440S-160C10NR	40	—	56	40	100	168.4	16.4	9	3
AHX440S-160C14NR	40	—	56	40	100	168.4	16.4	9	3
AHX440S-160C16NR	40	—	56	40	100	168.4	16.4	9	3

1/1

● : [redacted]magazynu w Japonii.

AHX440S – [illegible]

P	[illegible]	●	✠				●	●	●
M	[illegible]			●	✠			●	●
K	[illegible]					●	●	●	●
H	[illegible]								●

[illegible]:
●: [illegible]
✠: [illegible]
[illegible]:
[illegible]

[illegible]	[illegible]	[illegible]	MP6120	MP6130	MP7130	MP7140	MC5020	MV1020	MV1030	VP15TF	IC	S	BS	RE	APMX
NNMU130508ZER-L	M	E	●	●	●	●	●	●	●	●	13.4	5.09	1	0.8	3
NNMU130508ZEN-M	M	E	●	●	●	●	●	●	●	●	13.4	5.09	1	0.8	4*
NNMU130532ZEN-M	M	E	●	●	●	●	●	●	●	●	13.4	5.09	—	3.2	4*
NNMU130532ZEN-R	M	E	●	●	●	●	●	●	●	●	13.4	5.09	—	3.2	4*
WNEU1305ZEN4C-M	E	E	●				●			●	13.4	5.09	4	2.7	0.5

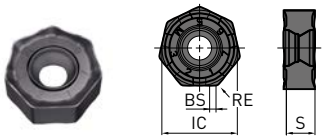

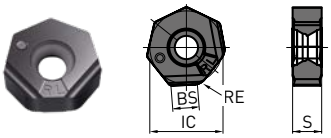

* [illegible] APMX = 3.0 mm

[illegible]

P	PVD					M	PVD				K	PVD			CVD			H	PVD
P10	VP15TF	MP6120		MV1020		M10	VP15TF				K10	VP15TF						H10	VP15TF
P20			MP6130		MV1030	M20		MP7130	MV1030		K20		XC5010	MC5020	MV1020	MV1030		H20	
P30						M30				MP7140	K30							H30	
P40						M40					K40							H40	

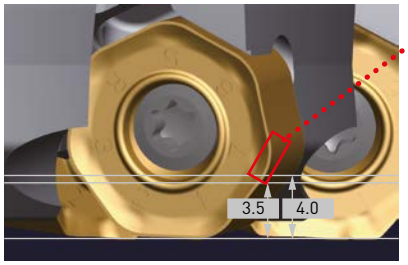

[illegible]

[illegible] mm
[illegible] supérieures à 3.5 mm.

[illegible]

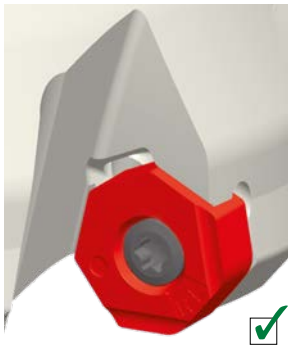

Fig. 1

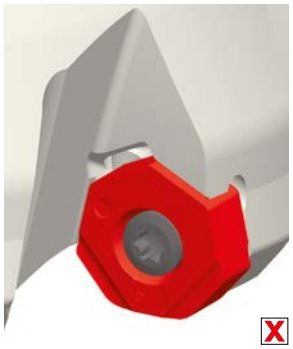

Fig. 2

1. [illegible]
2. [illegible]
2. [illegible] distribución proporcional dentro del plato de corte.

● : [illegible] magazynu w Japonii.

AHX440S

[illegible]

[illegible]GNIA

	Materiales de trabajo	[illegible]en	Nástrojový materiál	Vc	fz	ap	ae
P	[illegible]	<180HB	MV1020	300 (200–400)	0.30 (0.20–0.40)	≤3	≤0.8DC
			MP6120	250 (200–300)	0.30 (0.20–0.40)	≤3	≤0.8DC
			VP15TF	250 (200–300)	0.30 (0.20–0.40)	≤3	≤0.8DC
			MV1030	245 (190–300)	0.30 (0.20–0.40)	≤3	≤0.8DC
			MP6130	240 (190–290)	0.30 (0.20–0.40)	≤3	≤0.8DC
	[illegible]	180–280HB	MV1020	260 (170–350)	0.30 (0.20–0.40)	≤3	≤0.8DC
			MP6120	220 (170–270)	0.30 (0.20–0.40)	≤3	≤0.8DC
			VP15TF	220 (170–270)	0.30 (0.20–0.40)	≤3	≤0.8DC
			MV1030	210 (150–270)	0.30 (0.20–0.40)	≤3	≤0.8DC
			MP6130	200 (150–250)	0.30 (0.20–0.40)	≤3	≤0.8DC
		280–350HB	MV1020	180 (100–250)	0.30 (0.20–0.40)	≤3	≤0.8DC
			MP6120	140 (100–180)	0.30 (0.20–0.40)	≤3	≤0.8DC
			VP15TF	140 (100–180)	0.30 (0.20–0.40)	≤3	≤0.8DC
			MV1030	135 (90–180)	0.30 (0.20–0.40)	≤3	≤0.8DC
			MP6130	120 (90–150)	0.30 (0.20–0.40)	≤3	≤0.8DC
	Acero para herramientas [illegible] de aleación	≤350HB	MP6120	140 (100–180)	0.15 (0.20–0.20)	≤ 1	≤0.8DC
			VP15TF	140 (100–180)	0.15 (0.20–0.20)	≤ 1	≤0.8DC
			MP6130	120 (90–150)	0.15 (0.20–0.20)	≤ 1	≤0.8DC
	[illegible] Celik	35–45HRC	MP6120	140 (100–180)	0.15 (0.20–0.20)	≤ 1	≤0.8DC
			MP6130	120 (90–150)	0.15 (0.20–0.20)	≤ 1	≤0.8DC
M	[illegible] austenítico	≤200HB	MP7130	200 (150–250)	0.20 (0.10–0.30)	≤3	≤0.8DC
			VP15TF	200 (150–250)	0.20 (0.10–0.30)	≤3	≤0.8DC
			MV1030	185 (120–250)	0.20 (0.10–0.30)	≤3	≤0.8DC
			MP7140	180 (120–230)	0.20 (0.10–0.30)	≤3	≤0.8DC
		≥200HB	MP7130	150 (100–200)	0.20 (0.10–0.30)	≤3	≤0.8DC
			VP15TF	150 (100–200)	0.20 (0.10–0.30)	≤3	≤0.8DC
			MV1030	140 (80–200)	0.20 (0.10–0.30)	≤3	≤0.8DC
			MP7140	130 (80–180)	0.20 (0.10–0.30)	≤3	≤0.8DC
	[illegible]	≤200HB	MP7130	200 (150–250)	0.20 (0.10–0.30)	≤3	≤0.8DC
			VP15TF	200 (150–250)	0.20 (0.10–0.30)	≤3	≤0.8DC
			MV1030	185 (120–250)	0.20 (0.10–0.30)	≤3	≤0.8DC
			MP7140	180 (120–230)	0.20 (0.10–0.30)	≤3	≤0.8DC
		≥200HB	MP7130	150 (100–200)	0.20 (0.10–0.30)	≤3	≤0.8DC
			VP15TF	150 (100–200)	0.20 (0.10–0.30)	≤3	≤0.8DC
			MV1030	140 (80–200)	0.20 (0.10–0.30)	≤3	≤0.8DC
			MP7140	130 (80–180)	0.20 (0.10–0.30)	≤3	≤0.8DC
	[illegible]	≤280HB	MP7130	140 (100–180)	0.15 (0.20–0.20)	≤3	≤0.8DC
			VP15TF	140 (100–180)	0.15 (0.20–0.20)	≤3	≤0.8DC
			MP7140	120 (80–160)	0.15 (0.20–0.20)	≤3	≤0.8DC
	[illegible] Celik	≤450HB	MP7130	130 (100–160)	0.15 (0.20–0.20)	≤3	≤0.8DC
			VP15TF	130 (100–160)	0.15 (0.20–0.20)	≤3	≤0.8DC
			MP7140	110 (80–140)	0.15 (0.20–0.20)	≤3	≤0.8DC

1/2

1. [illegible] Kühlmittel.

AHX440S

[illegible]

[illegible]

	Materiales de trabajo	[illegible]	Nástrojový materiál	Vc	fz	ap	ae
K	[illegible]	<350MPa	MC5020	220 (150–300)	0.30 (0.20–0.40)	≤3	≤0.8DC
			VP15TF	180 (130–230)	0.30 (0.20–0.40)	≤3	≤0.8DC
	[illegible]	<450MPa	MV1020	240 (130–350)	0.20 (0.10–0.30)	≤3	≤0.8DC
			MC5020	220 (150–300)	0.20 (0.10–0.30)	≤3	≤0.8DC
			MV1030	185 (120–250)	0.20 (0.10–0.30)	≤3	≤0.8DC
			VP15TF	170 (120–220)	0.20 (0.10–0.30)	≤3	≤0.8DC
	[illegible]	<800MPa	MV1020	220 (80–350)	0.20 (0.10–0.30)	≤3	≤0.8DC
			MC5020	170 (150–200)	0.20 (0.10–0.30)	≤3	≤0.8DC
			MV1030	150 (100–200)	0.20 (0.10–0.30)	≤3	≤0.8DC
			VP15TF	140 (100–180)	0.20 (0.10–0.30)	≤3	≤0.8DC
H	[illegible]	40–55HRC	VP15TF	80 (60–100)	0.15 (0.10–0.20)	≤1	≤0.8DC

2/2

1. [illegible] Kühlmittel.

AHX440S

[redacted]

[redacted]NÍM

	Materiál de trabajo	[redacted]	Nástrojový [redacted] material	Vc	fz	ap	ae
M	[redacted] austenítické	≤200HB	MP7130	125 (100–150)	0.15 (0.10–0.20)	≤3	≤0.8DC
			VP15TF	125 (100–150)	0.15 (0.10–0.20)	≤3	≤0.8DC
			MP7140	100 (80–140)	0.15 (0.10–0.20)	≤3	≤0.8DC
		≥200HB	MP7130	100 (75–125)	0.15 (0.10–0.20)	≤3	≤0.8DC
			VP15TF	100 (75–125)	0.15 (0.10–0.20)	≤3	≤0.8DC
			MP7140	80 (55–105)	0.15 (0.10–0.20)	≤3	≤0.8DC
	Rostfreie Stähle [redacted] martensitisch	≤200HB	MP7130	125 (100–150)	0.15 (0.10–0.20)	≤3	≤0.8DC
			VP15TF	125 (100–150)	0.15 (0.10–0.20)	≤3	≤0.8DC
			MP7140	100 (80–140)	0.15 (0.10–0.20)	≤3	≤0.8DC
		≥200HB	MP7130	100 (75–125)	0.15 (0.10–0.20)	≤3	≤0.8DC
			VP15TF	100 (75–125)	0.15 (0.10–0.20)	≤3	≤0.8DC
			MP7140	80 (55–105)	0.15 (0.10–0.20)	≤3	≤0.8DC
	[redacted]	≤280HB	MP7130	80 (60–100)	0.10 (0.05–0.15)	≤3	≤0.8DC
			VP15TF	80 (60–100)	0.10 (0.05–0.15)	≤3	≤0.8DC
			MP7140	60 (40– 80)	0.10 (0.05–0.15)	≤3	≤0.8DC
	Aceros inoxidables [redacted] endurecido	≤450HB	MP7130	70 (50– 90)	0.10 (0.05–0.15)	≤3	≤0.8DC
			VP15TF	70 (50– 90)	0.10 (0.05–0.15)	≤3	≤0.8DC
			MP7140	50 (30– 70)	0.10 (0.05–0.15)	≤3	≤0.8DC

AHX440S

[illegible]

[illegible]ENIA PŁYTKI WYGŁADZAJĄCEJ

	Materiales de trabajo	[illegible]	Nástrojový materiál	Vc	fz	ap
P	[illegible]	<180HB	MP6120	250 (200–300)	0.30 (0.20–0.40)	≤0.5
			VP15TF	250 (200–300)	0.30 (0.20–0.40)	≤0.5
	[illegible]	180–280HB	MP6120	220 (170–270)	0.30 (0.20–0.40)	≤0.5
			VP15TF	220 (170–270)	0.30 (0.20–0.40)	≤0.5
		280–350HB	MP6120	140 (100–180)	0.30 (0.20–0.40)	≤0.5
			VP15TF	140 (100–180)	0.30 (0.20–0.40)	≤0.5
	Acero para herramientas, [illegible] de aleación	≤350HB	MP6120	140 (100–180)	0.15 (0.10–0.20)	≤0.5
			VP15TF	140 (100–180)	0.15 (0.10–0.20)	≤0.5
	[illegible]	35–45HRC	MP6120	140 (100–180)	0.15 (0.10–0.20)	≤0.5
			VP15TF	140 (100–180)	0.15 (0.10–0.20)	≤0.5
M	[illegible] austeníticos	≤200HB	VP15TF	125 (100–150)	0.15 (0.10–0.20)	≤0.5
		≥200HB	VP15TF	100 (75–125)	0.15 (0.10–0.20)	≤0.5
	[illegible] martensíticos	≤200HB	VP15TF	125 (100–150)	0.15 (0.10–0.20)	≤0.5
		≥200HB	VP15TF	100 (75–125)	0.15 (0.10–0.20)	≤0.5
	[illegible]	≤280HB	VP15TF	80 (60–100)	0.10 (0.05–0.15)	≤0.5
	[illegible]	≤450HB	VP15TF	70 (50– 90)	0.10 (0.05–0.15)	≤0.5
K	[illegible] Hierro	<350MPa	MC5020	320 (250–400)	0.30 (0.20–0.40)	≤0.5
			VP15TF	220 (150–300)	0.30 (0.20–0.40)	≤0.5
	[illegible]	<450MPa	MC5020	250(200–300)	0.20 (0.10–0.30)	≤0.5
			VP15TF	200 (150–250)	0.20 (0.10–0.30)	≤0.5
		<800MPa	MC5020	220 (200–250)	0.20 (0.10–0.30)	≤0.5
			VP15TF	170 (150–200)	0.20 (0.10–0.30)	≤0.5
H	[illegible]	40–55HRC	VP15TF	80 (60–100)	0.15 (0.10–0.20)	≤0.5

1/1

1. [illegible] di taglio.
2. [illegible] a umido.
   ([illegible] seco)
3. [illegible] de la placa.
4. [illegible].
5. [illegible] z chłodzeniem (na mokro).
5. [illegible] inoxidable.
   ([illegible] seco).

AHX475S

15° KAPR

[illegible] DE PAVSAUNCUE

P K H

KAPR: 15°
T: 16°
GAMP: -6°/9°
GAMF: -10°

1

Ø 50
Ø 63
Ø 80
Ø 100

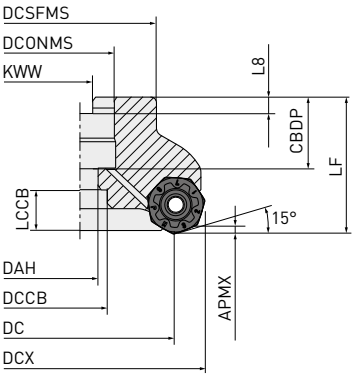

2

Ø 125
Ø 160

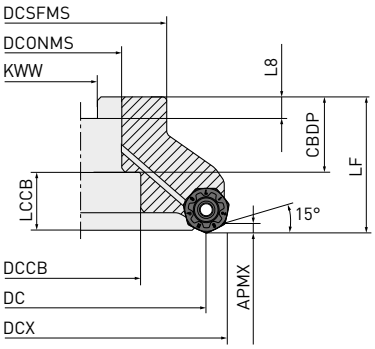

Solo [illegible]

Typ nástrojového [illegible] / Herramienta	[illegible] / Tesnění / Auslaufdichtung			Geometrie
AHX475S-050A○○AR	HSC10030H	HSC10035	1	1 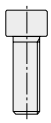
AHX475S-063A○○AR	HSC10030H	HSC10035		
AHX475S-080A○○AR	HSC12035H	HSC12035		
		HSC12045		
AHX475S-100B○○AR	HSC16040H	—		
AHX475S-125B○○AR	MBA20040H	—	2	2 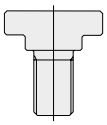
AHX475S-160B○○AR	MBA20040H	—		

AHX475S – [redacted]

[redacted]RMALÉSAGE

[redacted]ienowy	[redacted]	APMX	DC	DCONMS	LF	WT	ZEFF		[redacted]
AHX475S-050A04AR	●	1.6	50	22	50	0.6	4	○	1
AHX475S-050A05AR	●	1.6	50	22	50	0.6	5	○	1
AHX475S-063A05AR	●	1.6	63	22	50	1.0	5	○	1
AHX475S-063A06AR	●	1.6	63	22	50	0.9	6	○	1
AHX475S-080A06AR	●	1.6	80	27	50	1.6	6	○	1
AHX475S-080A08AR	●	1.6	80	27	50	1.5	8	○	1
AHX475S-100A07AR	●	1.6	100	32	63	3.2	7	○	2
AHX475S-100A09AR	●	1.6	100	32	63	3.2	9	○	2
AHX475S-125B08AR	●	1.6	125	40	63	3.8	8	○	2
AHX475S-125B10AR	●	1.6	125	40	63	3.8	10	○	2
AHX475S-160B10AR	●	1.6	160	40	63	5.4	10	○	2
AHX475S-160B12AR	●	1.6	160	40	63	5.3	12	○	2

1/1

1. [redacted]stalled.
2. ○ = [redacted]ania chłodziwa.

[redacted]

[redacted]ienowy	CBDP	DAH	DCCB	DCONMS	DCSFMS	DCX	KWW	L8	[redacted]
AHX475S-050A04AR	20	11	17	22	47	65.6	10.4	6.3	1
AHX475S-050A05AR	20	11	17	22	47	65.6	10.4	6.3	1
AHX475S-063A05AR	20	11	17	22	60	78.6	10.4	6.3	1
AHX475S-063A06AR	20	11	17	22	60	78.6	10.4	6.3	1
AHX475S-080A06AR	23	13	20	27	76	95.6	12.4	7	1
AHX475S-080A08AR	23	13	20	27	76	95.6	12.4	7	1
AHX475S-100A07AR	26	17	26	32	96	115.6	14.4	8	2
AHX475S-100A09AR	26	17	26	32	96	115.6	14.4	8	2
AHX475S-125B08AR	40	56	—	40	100	140.6	16.4	9	2
AHX475S-125B10AR	40	56	—	40	100	140.6	16.4	9	2
AHX475S-160B10AR	40	56	—	40	100	175.6	16.4	9	2
AHX475S-160B12AR	40	56	—	40	100	175.6	16.4	9	2

1/1

● : [redacted] magazynu w Japonii.

AHX475S – [illegible]

P	[illegible]	◐	✣		◐	◐	◐	[illegible]
K	[illegible]			◐	◐	◐	◐	● : [illegible] Bearbeitung
H	[illegible]						◐	[illegible] okrągłona

[illegible]	[illegible]	[illegible]	MP6120	MP6130	MC5020	MV1020	MV1030	VP15TF	IC	S	BS	RE	APMX
NNMU130532ZEN-M	M	E	●	●	●	●	●	●	13.4	5.09	—	3.2	1.6
NNMU130532ZEN-R	M	E	●	●	●	●	●	●	13.4	5.09	—	3.2	1.6

[illegible]

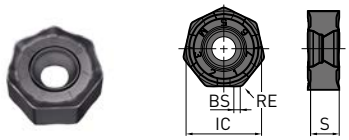

[illegible] ES

P	PVD	K	PVD	CVD	H	PVD
P10	VP15TF, MP6120, MP6130, MV1020, MV1030	K10	VP15TF, MV1020	MV1030, MC5020	H10	VP15TF
P20		K20			H20	
P30		K30			H30	
P40		K40			H40	

● : [illegible] magazynu w Japonii.

AHX475S

[illegible]

[illegible]GNIA

	Materiales de trabajo	[illegible]	Nástrojový [illegible] material	M	R	Vc	fz	ap	ae
P	[illegible]	<180HB	MV1020		R	220 (170 – 270)	0.6	≤1.6	≤0.5DC
			MV1020		R	220 (170 – 270)	0.8	≤1.6	0.5 – 0.8DC
			MV1020		M	220 (170 – 270)	1.0	≤1.6	0.8 – 1DC
			MP6120		R	150 (100 – 200)	0.6	≤1.6	≤0.5DC
			MP6120		R	150 (100 – 200)	0.8	≤1.6	0.5 – 0.8DC
			MP6120		M	150 (100 – 200)	1.0	≤1.6	0.8 – 1DC
			MV1030		R	140 (80 – 200)	0.6	≤1.6	≤0.5DC
			MV1030		R	140 (80 – 200)	0.8	≤1.6	0.5 – 0.8DC
			MV1030		M	140 (80 – 200)	1.0	≤1.6	0.8 – 1DC
			MP6130		R	130 (80 – 180)	0.6	≤1.6	≤0.5DC
			MP6130		R	130 (80 – 180)	0.8	≤1.6	0.5 – 0.8DC
			MP6130		M	130 (80 – 180)	1	≤1.6	0.8 – 1DC
	[illegible]	180–280HB	MV1020		R	200 (150 – 250)	0.6	≤1.6	≤0.5DC
			MV1020		R	200 (150 – 250)	0.8	≤1.6	0.5 – 0.8DC
			MV1020		M	200 (150 – 250)	1.0	≤1.6	0.8 – 1DC
			MP6120		R	130 (80 – 180)	0.6	≤1.6	≤0.5DC
			MP6120		R	130 (80 – 180)	0.8	≤1.6	0.5 – 0.8DC
			MP6120		M	130 (80 – 180)	1.0	≤1.6	0.8 – 1DC
			MV1030		R	140 (80 – 200)	0.6	≤1.6	≤0.5DC
			MV1030		R	140 (80 – 200)	0.8	≤1.6	0.5 – 0.8DC
			MV1030		M	140 (80 – 200)	1.0	≤1.6	0.8 – 1DC
			MP6130		R	110 (60 – 160)	0.6	≤1.6	≤0.5DC
			MP6130		R	110 (60 – 160)	0.8	≤1.6	0.5 – 0.8DC
			MP6130		M	110 (60 – 160)	1	≤1.6	0.8 – 1DC
	[illegible]	280–350HB	MV1020		R	150 (100 – 200)	0.5	≤1.6	≤0.5DC
			MV1020		R	150 (100 – 200)	0.6	≤1.6	0.5 – 0.8DC
			MV1020		R	150 (100 – 200)	0.7	≤1.6	0.8 – 1DC
			MP6120		R	100 (50 – 150)	0.5	≤1.6	≤0.5DC
			MP6120		R	100 (50 – 150)	0.6	≤1.6	0.5 – 0.8DC
			MP6120		R	100 (50 – 150)	0.7	≤1.6	0.8 – 1DC
			MV1030		R	90 (30 – 150)	0.5	≤1.6	≤0.5DC
			MV1030		R	90 (30 – 150)	0.6	≤1.6	0.5 – 0.8DC
			MV1030		R	90 (30 – 150)	0.7	≤1.6	0.8 – 1DC
			MP6130		R	80 (30 – 130)	0.5	≤1.6	≤0.5DC
			MP6130		R	80 (30 – 130)	0.6	≤1.6	0.5 – 0.8DC
			MP6130		R	80 (30 – 130)	0.7	≤1.6	0.8 – 1DC
	Acero para [illegible] de aleación	<350HB	MP6120		R	100 (50 – 150)	0.5	≤1.6	≤0.5DC
			MP6120		R	100 (50 – 150)	0.6	≤1.6	0.5 – 0.8DC
			MP6120		R	100 (50 – 150)	0.7	≤1.6	0.8 – 1DC
			MP6130		R	80 (30 – 120)	0.5	≤1.6	≤0.5DC
			MP6130		R	80 (30 – 120)	0.6	≤1.6	0.5 – 0.8DC
			MP6130		R	80 (30 – 120)	0.7	≤1.6	0.8 – 1DC
	[illegible]	35–45HRC	MP6120		R	100 (70 – 130)	0.5	≤1.6	≤0.5DC
			MP6120		R	100 (70 – 130)	0.6	≤1.6	0.5 – 0.8DC
			MP6120		R	100 (70 – 130)	0.7	≤1.6	0.8 – 1DC
			MP6130		R	80 (50 – 110)	0.5	≤1.6	≤0.5DC
			MP6130		R	80 (50 – 110)	0.6	≤1.6	0.5 – 0.8DC
			MP6130		R	80 (50 – 110)	0.7	≤1.6	0.8 – 1DC

AHX475S

[illegible]

[illegible]6NIA

Material de trabajo	[illegible]	Nástrojový materiál	M	R	Vc	fz	ap	ae
[illegible]	<350MPa	MC5020		R	150 (100 – 200)	0.6	≤1.6	≤0.5DC
		MC5020		R	150 (100 – 200)	0.8	≤1.6	0.5 – 0.8DC
		MC5020		M	150 (100 – 200)	1.0	≤1.6	0.8 – 1DC
		VP15TF		R	120 (80 – 160)	0.6	≤1.6	≤0.5DC
		VP15TF		R	120 (80 – 160)	0.8	≤1.6	0.5 – 0.8DC
		VP15TF		M	120 (80 – 160)	1.0	≤1.6	0.8 – 1DC
[illegible]	<450MPa	MV1020		R	200 (150 – 250)	0.6	≤1.6	≤0.5DC
		MV1020		R	200 (150 – 250)	0.8	≤1.6	0.5 – 0.8DC
		MV1020		M	200 (150 – 250)	1.0	≤1.6	0.8 – 1DC
		MC5020		R	150 (100 – 200)	0.6	≤1.6	≤0.5DC
		MC5020		R	150 (100 – 200)	0.8	≤1.6	0.5 – 0.8DC
		MC5020		M	150 (100 – 200)	1.0	≤1.6	0.8 – 1DC
		MV1030		R	140 (80 – 200)	0.6	≤1.6	≤0.5DC
		MV1030		R	140 (80 – 200)	0.8	≤1.6	0.5 – 0.8DC
		MV1030		M	140 (80 – 200)	1.0	≤1.6	0.8 – 1DC
		VP15TF		R	120 (80 – 160)	0.6	≤1.6	≤0.5DC
		VP15TF		R	120 (80 – 160)	0.8	≤1.6	0.5 – 0.8DC
		VP15TF		M	120 (80 – 160)	1	≤1.6	0.8 – 1DC
[illegible]	<800MPa	MV1020		R	180 (130 – 230)	0.5	≤1.6	≤0.5DC
		MV1020		R	180 (130 – 230)	0.6	≤1.6	0.5 – 0.8DC
		MV1020		R	180 (130 – 230)	0.7	≤1.6	0.8 – 1DC
		MC5020		R	150 (100 – 200)	0.5	≤1.6	≤0.5DC
		MC5020		R	150 (100 – 200)	0.6	≤1.6	0.5 – 0.8DC
		MC5020		R	150 (100 – 200)	0.7	≤1.6	0.8 – 1DC
		MV1030		R	140 (80 – 200)	0.5	≤1.6	≤0.5DC
		MV1030		R	140 (80 – 200)	0.6	≤1.6	0.5 – 0.8DC
		MV1030		R	140 (80 – 200)	0.7	≤1.6	0.8 – 1DC
		VP15TF		R	120 (80 – 160)	0.5	≤1.6	≤0.5DC
		VP15TF		R	120 (80 – 160)	0.6	≤1.6	0.5 – 0.8DC
		VP15TF		R	120 (80 – 160)	0.7	≤1.6	0.8 – 1DC
[illegible]	40–55HRC	VP15TF		R	70 (50 – 90)	0.4	≤1.6	≤0.5DC
		VP15TF		R	70 (50 – 90)	0.5	≤1.6	0.5 – 0.8DC
		VP15TF		R	70 (50 – 90)	0.6	≤1.6	0.8 – 1DC

2/2

AHX640S

50° KAPR

[illegible] NATURA

P M K S H

KAPR: 50°
GAMP: -5°
GAMF: -6°

1

Ø 63
Ø 80

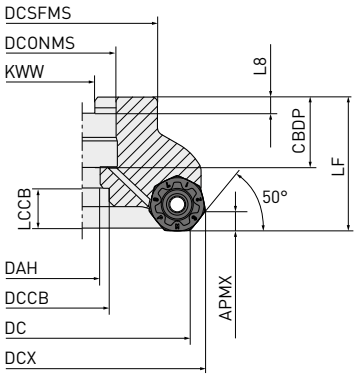

2

Ø 100
Ø 125

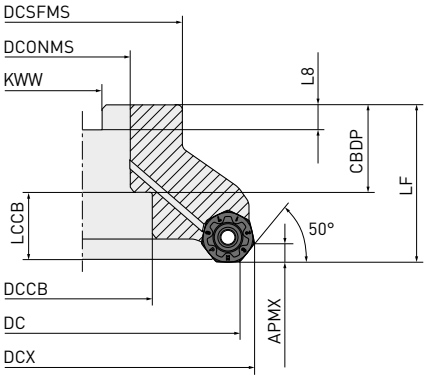

3

Ø 160

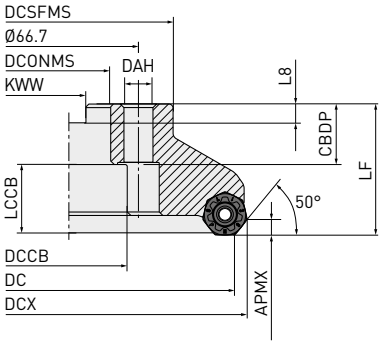

4

Ø 200

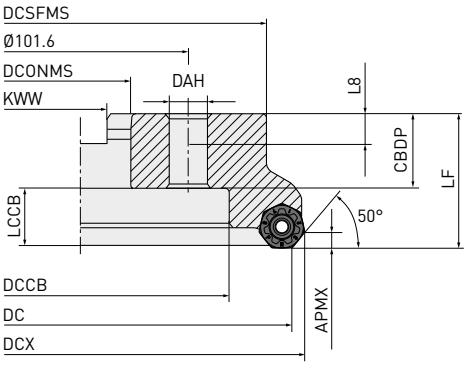

Solo [illegible]

Tipo de herramienta / Typ nástroje / Tipo de ferramenta / Tip alat	Set bolt / [illegible]		Geometría / [illegible]
AHX640S-063A○○AR	HSC10030H	1	1 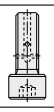
AHX640S-080A○○AR	HSC12035H		
AHX640S-100B○○AR	MBA16033H		
AHX640S-125B○○AR	MBA20040H	2	2 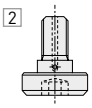
AHX640S-160C○○NR	—	—	
AHX640S-200C○○NR	—	—	

AHX640S – [redacted]NATURA

[redacted]RMA ÉSAGE

[redacted]ienowy	[redacted]	APMX	DC	DCONMS	LF	WT	ZEFF	[redacted]	[redacted]
AHX640S-063A04AR	●	6	63	22	50	0.7	4	○	1
AHX640S-063A05AR	●	6	63	22	50	0.6	5	○	1
AHX640S-080A04AR	●	6	80	27	50	1.1	4	○	1
AHX640S-080A06AR	●	6	80	27	50	1.0	6	○	1
AHX640S-100B05AR	●	6	100	32	50	1.7	5	○	2
AHX640S-100B07AR	●	6	100	32	50	1.6	7	○	2
AHX640S-125B06AR	●	6	125	40	63	3.1	6	○	2
AHX640S-125B08AR	●	6	125	40	63	3.0	8	○	2
AHX640S-160C07NR	●	6	160	40	63	5.4	7	—	3
AHX640S-160C10NR	●	6	160	40	63	5.2	10	—	3
AHX640S-200C08NR	●	6	200	60	63	7.8	8	—	4
AHX640S-200C12NR	●	6	200	60	63	7.5	12	—	4

1/1

1. ○ = [redacted]ania chłodziwa.

[redacted]

[redacted]ienowy	CBDP	DAH	DCCB	DCONMS	DCSFMS	DCX	KWW	L8	[redacted]
AHX640S-063A04AR	20	11	—	22	50	75.55	10.4	6.3	1
AHX640S-063A05AR	20	11	—	22	50	75.55	10.4	6.3	1
AHX640S-080A04AR	23	13	—	27	56	92.55	12.4	7	1
AHX640S-080A06AR	23	13	—	27	56	92.55	12.4	7	1
AHX640S-100B05AR	32	—	45	32	78	112.55	14.4	8	2
AHX640S-100B07AR	32	—	45	32	78	112.55	14.4	8	2
AHX640S-125B06AR	42	—	56	40	89	137.55	16.4	9	2
AHX640S-125B08AR	42	—	56	40	89	137.55	16.4	9	2
AHX640S-160C07NR	29	—	56	40	120	172.55	16.4	9	3
AHX640S-160C10NR	29	—	56	40	120	172.55	16.4	9	3
AHX640S-200C08NR	32	—	140	60	175	212.55	25.7	14.22	4
AHX640S-200C12NR	32	—	140	60	175	212.55	25.7	14.22	4

1/1

[redacted]O [redacted]RO

P	PVD	M	PVD	K	PVD	CVD	S	PVD	H	PVD
P10	VP15TF, VP20RT, MP6120	M10	VP15TF, VP20RT	K10	VP15TF	MC5020	S10	VP20RT, MP9120	H10	VP15TF
P20	MP6130	M20	MP7030	K20	VP20RT		S20	MP9130	H20	
P30		M30		K30			S30		H30	
P40		M40		K40			S40		H40	

GRUPY MATERIAŁOWE [redacted]TEK [redacted]A

K	CVD
K10	XC5010
K20	
K30	
K40	

● : [redacted] magazynu w Japonii.

AHX640S – [illegible]

P	[illegible]			◐	✠				◐	◐
M	[illegible]					◐			◐	◐
K	[illegible] Demir	◐	◐						✠	◐
S	[illegible]						◑	✠	◐	◐
H	[illegible] lik								◐	

[illegible] :
●: [illegible]
✠: [illegible]
[illegible]:
[illegible] okrąglona

[illegible]	[illegible]	[illegible]	XC5010	MC5020	MP6120	MP6130	MP7030	MP9120	MP9130	VP15TF	VP20RT	IC	S	BS	RE	APMX	[illegible]
L																	
NNMU200712ZER-L	M	E						●	●			20	8.0	1.0	1.2	6	
M/MP																	
NNMU200708ZEN-MP	M	E								●		20	8.0	1.0	0.8	6	
NNMU200708ZEN-M	M	E			●	●						20	8.0	1.0	0.8	6	
WP (Wiper)																	
WNEU2007ZEN7C-WP	M	E								●		20	7.2	7.1	0.8	6	
MM																	
NNMU200712ZER-MM	M	E					●					20	8.0	1.0	1.2	6	
MK																	
NNMU200608ZEN-MK	M	E	●	●						●	★	20	6.55	1.0	0.8	6	
HK																	
NNMU200608ZEN-HK	M	E		●						●	★	20	6.55	1.0	0.8	6	
WK* (Wiper)																	
WNEU2006ZEN7C-WK	M	E		●								20	6.55	7.4	0.8	6	
FT																	
NNMQ200708ZEN-FT	M	E	●									20	6.55	1.0	0.8	6	

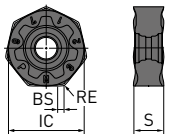

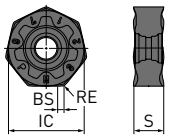

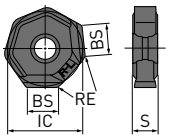

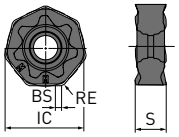

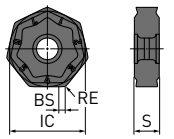

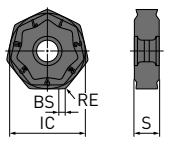

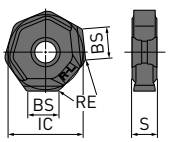

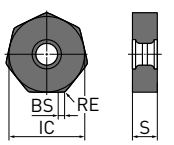

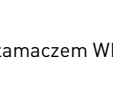

* [illegible] AHX640S.

1. [illegible] z łamaczem WK oraz
2. [illegible] sveden.
2. Płytki z łamaczem typu MK/HK mają różną wysokość.

●: [illegible] magazynu w Japonii.

AHX640S

[illegible]

[illegible]

	Materiales de trabajo	[illegible]	Schnitt-[illegible] bedingungen	Nástrojový [illegible] material		Vc	fz	ap	ae
P	[illegible]	<180HB		MP6120	M	250 (200–300)	0.30 (0.20–0.40)	≤5	≤0.8DC
				VP15TF	MP	250 (200–300)	0.30 (0.20–0.40)	≤5	≤0.8DC
				MP6130	M	220 (170–270)	0.40 (0.30–0.50)	≤5	≤0.8DC
	[illegible]	180–280HB		MP6120	M	220 (170–270)	0.30 (0.20–0.40)	≤5	≤0.8DC
				VP15TF	MP	220 (170–270)	0.30 (0.20–0.40)	≤5	≤0.8DC
				MP6130	M	190 (140–240)	0.40 (0.30–0.50)	≤5	≤0.8DC
		280–350HB		MP6120	M	140 (100–180)	0.30 (0.20–0.40)	≤5	≤0.8DC
				VP15TF	MP	140 (100–180)	0.30 (0.20–0.40)	≤5	≤0.8DC
				MP6130	M	110 (70–150)	0.40 (0.30–0.50)	≤5	≤0.8DC
	Acero para herramientas, [illegible] de aleación	≤350HB		MP6120	M	140 (100–180)	0.15 (0.10–0.20)	≤3	≤0.8DC
				VP15TF	MP	140 (100–180)	0.15 (0.10–0.20)	≤3	≤0.8DC
				MP6130	M	110 (70–150)	0.25 (0.20–0.30)	≤3	≤0.8DC
	[illegible] Çelik	35–45HRC		MP6120	M	140 (100–180)	0.15 (0.10–0.20)	≤3	≤0.8DC
				VP15TF	MP	140 (100–180)	0.15 (0.10–0.20)	≤5	≤0.8DC
				MP6130	M	110 (70–150)	0.25 (0.20–0.30)	≤3	≤0.8DC
M	[illegible] austeníticos	≤200HB		MP7030	MM	200 (150–250)	0.20 (0.10–0.30)	≤5	≤0.8DC
		≥200HB		MP7030	MM	150 (100–200)	0.20 (0.10–0.30)	≤5	≤0.8DC
	[illegible]	≤280HB		MP7030	MM	140 (100–180)	0.15 (0.05–0.25)	≤5	≤0.8DC
	[illegible] intensitiques	≤200HB		MP7030	MM	200 (150–250)	0.20 (0.10–0.30)	≤5	≤0.8DC
		≥200HB		MP7030	MM	150 (100–200)	0.20 (0.10–0.30)	≤5	≤0.8DC
	[illegible] precipitación	≤450HB		MP7030	MM	130 (100–160)	0.15 (0.05–0.25)	≤5	≤0.8DC
K	[illegible]	<350MPa		XC5010	MK, FT	800 (500–1000)	0.10 (0.10–0.30)	≤3	≤0.8DC
				MC5020	MK, HK	220 (150–300)	0.30 (0.20–0.40)	≤5	≤0.8DC
				VP15TF	MP	180 (130–230)	0.30 (0.20–0.40)	≤5	≤0.8DC
				VP15TF, VP20RT	MK, HK	180 (130–230)	0.30 (0.20–0.40)	≤5	≤0.8DC
	[illegible]	<450MPa		XC5010	MK, FT	800 (500–1000)	0.10 (0.10–0.30)	≤3	≤0.8DC
				MC5020	MK, HK	200 (150–250)	0.20 (0.10–0.30)	≤5	≤0.8DC
				VP15TF	MP	170 (120–220)	0.20 (0.10–0.30)	≤5	≤0.8DC
				VP15TF, VP20RT	MK, HK	170 (120–220)	0.20 (0.10–0.30)	≤5	≤0.8DC
		<800MPa		XC5010	MK, FT	800 (500–1000)	0.10 (0.10–0.30)	≤3	≤0.8DC
				MC5020	MK, HK	170 (150–200)	0.20 (0.10–0.30)	≤5	≤0.8DC
				VP15TF	MP	140 (100–180)	0.20 (0.10–0.30)	≤5	≤0.8DC
				VP15TF, VP20RT	MK, HK	140 (100–180)	0.20 (0.10–0.30)	≤5	≤0.8DC
H	[illegible]	40–55HRC		VP15TF	MP	80 (60–100)	0.15 (0.10–0.20)	≤3	≤0.8DC

1/1

1. [illegible]
2. [illegible] heat resistant alloys.
2. [illegible] the table
3. [illegible] Tabelle angepasst werden.

AHX640S

[redacted]

[redacted]NÍM

	Materiál de trabajo	[redacted]	Nástrojový [redacted] material		Vc	fz	ap	ae
M	[redacted] austenitico	≤200HB	MP7030	MM	125 (100–150)	0.15 (0.10–0.20)	≤5	≤0.8DC
		≥200HB	MP7030	MM	100 (75–125)	0.15 (0.10–0.20)	≤5	≤0.8DC
	[redacted]	≤280HB	MP7030	MM	80 (60–100)	0.10 (0.05–0.15)	≤5	≤0.8DC
	Aciers inoxydables [redacted] ferritiques et martensitiques	≤200HB	MP7030	MM	125 (100–150)	0.15 (0.10–0.20)	≤5	≤0.8DC
		≥200HB	MP7030	MM	100 (75–125)	0.15 (0.10–0.20)	≤5	≤0.8DC
	[redacted]	≤450HB	MP7030	MM	70 (50– 90)	0.10 (0.05–0.15)	≤5	≤0.8DC
S	[redacted]	—	MP7030	MM	40 (20– 50)	0.15 (0.10–0.20)	≤3	≤0.6DC
			MP9120	L	60 (50– 70)	0.10 (0.05–0.15)	≤3	≤0.6DC
			MP9130	L	40 (20– 50)	0.15 (0.10–0.20)	≤3	≤0.6DC
	[redacted]	—	MP7030	MM	40 (20– 50)	0.15 (0.10–0.20)	≤3	≤0.6DC
			MP9120	L	60 (50– 70)	0.10 (0.05–0.15)	≤3	≤0.6DC
			MP9130	L	40 (20– 50)	0.15 (0.10–0.20)	≤3	≤0.6DC

1/1

1. [redacted]
2. [redacted] heat resistant alloys.
2. [redacted] al calore.
3. [redacted] reduzieren.

[redacted]ENIA PŁYTKI WYGŁADZAJĄCEJ

	Materiál de trabajo	[redacted]	Hlavní [redacted] destička		Breit- [redacted] schlichtwendeschneidplatte WSP		Vc	fz	ap	ae
P	[redacted]	≤180HB	VP15TF	MP	VP15TF	WP	250 (200–300)	0.30 (0.20–0.40)	≤0.5	≤0.8DC
			MP6120	M	MP6120	M	250 (200–300)	0.30 (0.20–0.40)	≤0.5	≤0.8DC
	[redacted]	180–280HB	VP15TF	MP	VP15TF	WP	220 (170–270)	0.30 (0.20–0.40)	≤0.5	≤0.8DC
			MP6120	M	MP6120	M	220 (170–270)	0.30 (0.20–0.40)	≤0.5	≤0.8DC
		280–350HB	VP15TF	MP	VP15TF	WP	140 (100–180)	0.30 (0.20–0.40)	≤0.5	≤0.8DC
			MP6120	M	MP6120	M	140 (100–180)	0.30 (0.20–0.40)	≤0.5	≤0.8DC
K	[redacted]	≤350MPa	MC5020	MK, HK	MC5020	WK	320 (250–400)	0.30 (0.20–0.40)	≤0.5	≤0.8DC
			VP15TF	MP	VP15TF	WP	220 (150–300)	0.30 (0.20–0.40)	≤0.5	≤0.8DC
	[redacted]	≤450MPa	MC5020	MK, HK	MC5020	WK	250 (200–300)	0.20 (0.10–0.30)	≤0.5	≤0.8DC
			VP15TF	MP	VP15TF	WP	200 (150–250)	0.20 (0.10–0.30)	≤0.5	≤0.8DC
		≤800MPa	MC5020	MK, HK	MC5020	WK	220 (200–250)	0.20 (0.10–0.30)	≤0.5	≤0.8DC
			VP15TF	MP	VP15TF	WP	170 (150–200)	0.20 (0.10–0.30)	≤0.5	≤0.8DC
S	[redacted]	—	VP15TF	MP	VP15TF	WP	40 (20– 50)	0.15 (0.10–0.20)	≤0.5	≤0.8DC
H	[redacted]	40–55HRC	VP15TF	MP	VP15TF	WP	80 (60–100)	0.15 (0.10–0.20)	≤0.5	≤0.8DC

1/1

1. [redacted] reduzieren.
2. [redacted] géométrie MK ou HK.

AHX640W

50° KAPR

F

R

[redacted]

K

KAPR: 50°
GAMP: -5°
GAMF: -6°

1

Ø 80

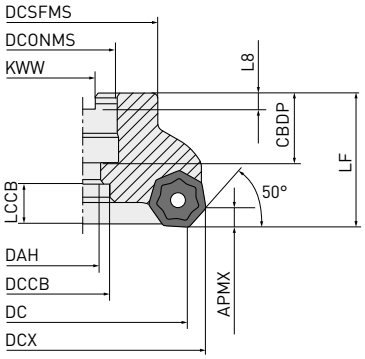

2

Ø 100
Ø 125

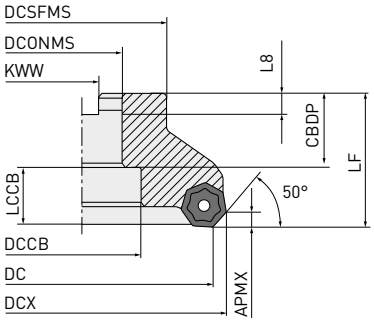

3

Ø 160

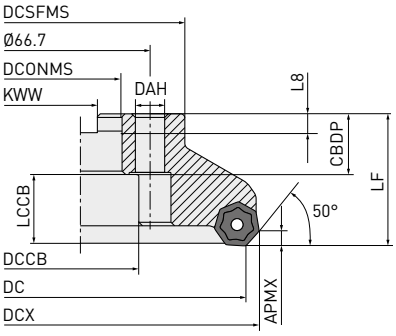

4

Ø 200
Ø 250

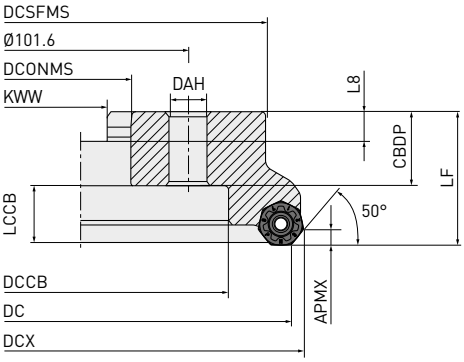

5

Ø 315

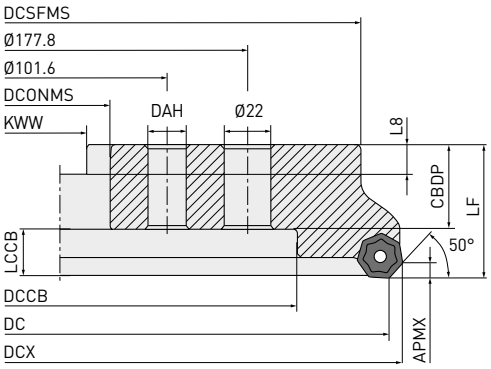

Solo [redacted]

AHX640W – [redacted]ACEYZN
[redacted]SAME

[redacted]RMALÉSAGE

[redacted]ienowy	[redacted]		APMX	DC	DCONMS	LF	WT	ZEFF	[redacted]
	R	L							
AHX640W-080A08R/L	●	●	6	80	27	50	1.5	8	1
AHX640W-080A10R/L	●	●	6	80	27	50	1.5	10	1
AHX640W-100B10R/L	●	●	6	100	32	50	2.1	10	2
AHX640W-100B14R/L	●	●	6	100	32	50	2.1	14	2
AHX640W-125B12R/L	●	●	6	125	40	63	3.1	12	2
AHX640W-125B18R/L	●	●	6	125	40	63	3.1	18	2
AHX640W-160C16R/L	●	●	6	160	40	63	5.6	16	3
AHX640W-160C22R/L	●	●	6	160	40	63	5.6	22	3
AHX640W-200C20R/L	●	●	6	200	60	63	8.0	20	4
AHX640W-200C28R/L	●	●	6	200	60	63	8.0	28	4
AHX640W-250C24R/L	●	●	6	250	60	63	12.6	24	4
AHX640W-250C36R/L	●	●	6	250	60	63	12.6	36	4
AHX640W-315C28R/L	●	●	6	315	60	80	31.5	28	5
AHX640W-315C44R/L	●	●	6	315	60	80	31.5	44	5

1/1

38

[redacted]H

[redacted]ienowy	CBDP	DAH	DCCB	DCONMS	DCSFMS	DCX	KWW	L8	[redacted]
AHX640W-080A08R/L	23	13	—	27	56	92.6	12.4	7	1
AHX640W-080A10R/L	23	13	—	27	56	92.6	12.4	7	1
AHX640W-100B10R/L	32	—	45	32	70	112.6	14.4	8	2
AHX640W-100B14R/L	32	—	45	32	70	112.6	14.4	8	2
AHX640W-125B12R/L	32	—	56	40	80	137.6	16.4	9	2
AHX640W-125B18R/L	32	—	56	40	80	137.6	16.4	9	2
AHX640W-160C16R/L	29	—	56	40	100	172.6	16.4	9	3
AHX640W-160C22R/L	29	—	56	40	100	172.6	16.4	9	3
AHX640W-200C20R/L	32	—	135	60	155	212.6	25.7	14	4
AHX640W-200C28R/L	32	—	135	60	155	212.6	25.7	14	4
AHX640W-250C24R/L	32	—	180	60	200	262.6	25.7	14	4
AHX640W-250C36R/L	32	—	180	60	200	262.6	25.7	14	4
AHX640W-315C28R/L	57	—	225	60	285	327.6	25.7	14	5
AHX640W-315C44R/L	57	—	225	60	285	327.6	25.7	14	5

1/1

● : [redacted] magazynu w Japonii.

AHX640W – [illegible]

K	[illegible] Demir										

[illegible]

[illegible]	[illegible]	[illegible]	XC5010	MC5020	VP15TF	VP20RT	IC	S	BS	RE	APMX	[illegible]
MK												
NNMU200608ZEN-MK	M	E	●	●	●	●	20	6.1	1.0	0.8	6	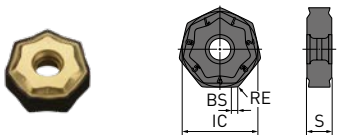
HK												
NNMU200608ZEN-HK	M	E		●	●	●	20	6.1	1.0	0.8	6	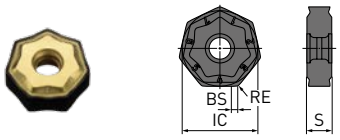
FT												
NNMQ200708ZEN-FT	M	E	●		●		20	6.55	1.0	0.8	6	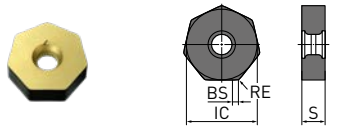
WK												
WNEU2006ZEN7C-WK	E	E		●			20	6.55	7.4	0.8	0.5	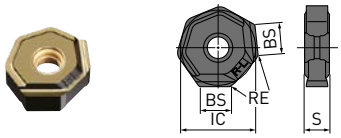

1. [illegible] mano izquierda.

[illegible]

K	PVD		CVD	
K10	VP15TF		XC5010	MC5020
K20		VP20RT		
K30				
K40				

● : [illegible] magazynu w Japonii.

AHX640W

[illegible]

[illegible]ING

	Materiales de trabajo	[illegible]	Schnitt-bedingungen	Nástroj[illegible]teriál		Vc	fz	ap	ae
K	[illegible]mir	<350MPa		XC5010	MK, FT	800 (500–1000)	0.1 (0.1–0.3)	≤3	≤0.8DC
				MC5020	MK, HK	220 (150– 300)	0.3 (0.2–0.4)	≤5	≤0.8DC
				VP15TF/VP20RT	MK, HK	180 (130– 230)	0.3 (0.2–0.4)	≤5	≤0.8DC
	[illegible]	<450MPa		XC5010	MK, FT	800 (500–1000)	0.1 (0.1–0.3)	≤3	≤0.8DC
				MC5020	MK, HK	200 (150– 250)	0.2 (0.1–0.3)	≤5	≤0.8DC
				VP15TF/VP20RT	MK, HK	170 (120– 220)	0.2 (0.1–0.3)	≤5	≤0.8DC
		<800MPa		XC5010	MK, FT	800 (500–1000)	0.1 (0.1–0.3)	≤3	≤0.8DC
				MC5020	MK, HK	170 (150– 200)	0.2 (0.1–0.3)	≤5	≤0.8DC
				VP15TF/VP20RT	MK, HK	140 (100– 180)	0.2 (0.1–0.3)	≤5	≤0.8DC

1/1

1. [illegible] china.
2. [illegible] con el corte en seco.
2. Trwałość narzędzia przy obróbce na mokro jest krótsza niż przy obróbce na sucho.

[illegible]TEK WYGŁADZAJĄCYCH)

	Materiales de trabajo	[illegible]	Schnitt-bedingungen	Nástroj[illegible]teriál		Vc	fz	ap
K	[illegible]mir	<350MPa		MC5020	MK, HK	320 (250–400)	0.2 (0.1–0.3)	<0.5
				MC5020	MK, HK	270 (200–350)	0.2 (0.1–0.3)	0.5–3
	[illegible]	<450MPa		MC5020	MK, HK	270 (200–350)	0.2 (0.1–0.3)	<0.5
				MC5020	MK, HK	220 (200–250)	0.2 (0.1–0.3)	0.5–3

1/1

1. [illegible]

ДОПОЛНИТЕЛЬНЫЙ ЛИСТ

[redacted]SCHAFTEN

GERMANY
MMC HARTMETALL GMBH
Comeniusstr. 2 . 40670 Meerbusch
Phone +49 2159 91890 . Fax +49 2159 918966
Email admin@mmchg.de

U.K. Office
MMC HARDMETAL U.K. LTD.
Mitsubishi House . Galena Close . Tamworth . Staffs. B77 4AS
Phone +44 1827 312312
Email sales@mitsubishicarbide.co.uk

SPAIN
MITSUBISHI MATERIALS ESPAÑA, S.A.
Calle Emperador 2 . 46136 Museros / Valencia
Phone +34 96 1441711
Email comercial@mmevalencia.es

FRANCE
MMC METAL FRANCE S.A.R.L.
6, Rue Jacques Monod . 91400 Orsay
Phone +33 1 69 35 53 53 . Fax +33 1 69 35 53 50
Email mmfsales@mmc-metal-france.fr

POLAND
MMC HARDMETAL POLAND SP. Z O.O
Al. Armii Krajowej 61 . 50 - 541 Wroclaw
Phone +48 71335 1620 . Fax +48 71335 1621
Email sales@mitsubishicarbide.com.pl

ITALY
MMC ITALIA S.R.L.
Viale Certosa 144 . 20156 Milano
Phone +39 0293 77031 . Fax +39 0293 589093
Email info@mmc-italia.it

TURKEY
MMC HARTMETALL GMBH ALMANYA - İZMİR MERKEZ ŞUBESİ
Adalet Mahallesi Anadolu Caddesi No: 41-1 . 15001 35530 Bayraklı / İzmir
Phone +90 232 5015000 . Fax +90 232 5015007
Email info@mmchg.com.tr

www.mmc-carbide.com

[redacted]R:

B195B[redacted]24.05
[redacted]24.05